DRAPER®

INSTRUCTIONS FOR

300kg Heavy Duty Log Stand

Stock No.32274 **Part No.AGP102**

IMPORTANT: PLEASE READ THESE INSTRUCTIONS CAREFULLY TO ENSURE THE SAFE AND EFFECTIVE USE OF THIS PRODUCT.

CE

GENERAL INFORMATION

These instructions accompanying the product are the original instructions. This document is part of the product, keep it for the life of the product passing it on to any subsequent holder of the product. Read all these instructions before assembling, operating or maintaining this product.

This manual has been compiled by Draper Tools describing the purpose for which the product has been designed, and contains all the necessary information to ensure its correct and safe use. By following all the general safety instructions contained in this manual, it will ensure both product and operator safety, together with longer life of the product itself.

All photographs and drawings in this manual are supplied by Draper Tools to help illustrate the operation of the product.

Whilst every effort has been made to ensure the accuracy of information contained in this manual, the Draper Tools policy of continuous improvement determines the right to make modifications without prior warning.

1. TITLE PAGE

1.1 INTRODUCTION:

USER MANUAL FOR:

300kg HEAVY DUTY LOG STAND

Stock no. 32274
Part no. AGP102

1.2 REVISIONS:

Date first published May 2013

As our user manuals are continually updated, users should make sure that they use the very latest version.

Downloads are available from: http://www.drapertools.com/b2c/b2cmanuals.pgm

DRAPER TOOLS LIMITED
HURSLEY ROAD
CHANDLER'S FORD
EASTLEIGH
HAMPSHIRE
SO53 1YF
UK

WEBSITE: www.drapertools.com
PRODUCT HELPLINE: +44 (0) 23 8049 4344
GENERAL FAX: +44 (0) 23 8026 0784

1.3 UNDERSTANDING THIS MANUALS SAFETY CONTENT:

WARNING! Information that draws attention to the risk of injury or death.

CAUTION! Information that draws attention to the risk of damage to the product or surroundings.

NOTE! Important information.

1.4 COPYRIGHT © NOTICE:

Copyright © Draper Tools Limited.
Permission is granted to reproduce this publication for personal & educational use only.
Commercial copying, redistribution, hiring or lending is prohibited.
No part of this publication may be stored in a retrieval system or transmitted in any other form or means without written permission from Draper Tools Limited.

In all cases this copyright notice must remain intact.

2. CONTENTS

2.1 CONTENTS

Page content ***Page***

1 TITLE PAGE
- 1.1 INTRODUCTION 2
- 1.2 REVISION HISTORY 2
- 1.3 UNDERSTANDING THIS MANUAL 2
- 1.4 COPYRIGHT NOTICE 2

2 CONTENTS
- 2.1 CONTENTS 3

3 GUARANTEE
- 3.1 GUARANTEE 4

4 INTRODUCTION
- 4.1 SCOPE 5
- 4.2 SPECIFICATION 5
- 4.3 HANDLING & STORAGE 5

5 HEALTH & SAFETY INFORMATION
- 5.1 GENERAL SAFETY INSTRUCTIONS FOR LOG STAND USE 6

6 TECHNICAL DESCRIPTION
- 6.1 IDENTIFICATION 7

7 ASSEMBLY PROCEDURE
- 8.1 ASSEMBLY INSTRUCTIONS 8

8 OPERATING THE LOG STAND
- 8.1 OPERATING THE LOG STAND 11
- 8.2 ATTACHING THE CHAIN 12
- 8.3 SETTING THE LOG 12
- 8.4 CUTTING THE LOG 13

9 MAINTENANCE
- 9.1 MAINTENANCE 14

10 DISPOSAL
- 10.1 DISPOSAL 15

11 CONTACTS

DECLARATION OF CONFORMITY ..... ENCLOSED

3. GUARANTEE

3.1 GUARANTEE

Draper products have been carefully tested and inspected before shipment and are guaranteed to be free from defective materials and workmanship.

Should the product develop a fault, please return the complete item to your nearest distributor or contact Draper Tools Limited, Chandler's Ford, Eastleigh, Hampshire, SO53 1YF. England.

Telephone Sales Desk: (023) 8049 4333 or Product Helpline (023) 8049 4344.

A proof of purchase must be provided with the item.

If upon inspection it is found that the fault occurring is due to defective materials or workmanship, repairs will be carried out free of charge. This guarantee period covering parts/labour is 12 months from the date of purchase except where items are hired out when the guarantee period is ninety days from the date of purchase. The guarantee is extended to 24 months for parts only. This guarantee does not apply to normal wear and tear, nor does it cover any damage caused by misuse, careless or unsafe handling, alterations, accidents, or repairs attempted or made by any personnel other than the authorised Draper warranty repair agent.

Note: If the tool is found not to be within the terms of warranty, repairs and carriage charges will be quoted and made accordingly.

This guarantee applies in lieu of any other guarantee expressed or implied and variations of its terms are not authorised.

Your Draper guarantee is not effective unless you can produce upon request a dated receipt or invoice to verify your proof of purchase within the guarantee period.

Please note that this guarantee is an additional benefit and does not affect your statutory rights.

Draper Tools Limited.

4. INTRODUCTION

4.1 SCOPE

This heavy duty log stand (Stock No.32274) is a manually operated saw horse, designed to enable the efficient and safe sawing of logs and branches.

Its powder coated steel construction means it is suitable for home/DIY use or by professional aborists for the sole purpose of sawing logs upto 300kg in weight.

4.2 SPECIFICATION

Stock no	32274
Part no	AGP102
Max. log length	6M
Min. log diameter	50mm
Max. log diameter	360mm
Max. log weight	300kg
Dimensions (L x W x H)	1320x 500 x 750mm
Weight	13.5kg (net)
	14.4kg (gross)

4.3 HANDLING & STORAGE

Although this machine is strong and durable, care must still be taken when handling and lifting. Dropping this machine will have an effect on the fixings used in it's construction and may also result in personal injury. This machine is not a toy and must be respected.

This product is likely to be used outside and be subjected to all number of weather variables.

Care should be taken to avoid leaving if exposed to the elements as this could cause rusting which will weaken the product. Best policy is to store in a dry location when not in use.

5. HEALTH & SAFETY INFORMATION

5.1 GENERAL SAFETY INSTRUCTIONS FOR TOOL USE

When using this log stand there are steps that should be taken to make sure that you, as the user, remain safe.
Common sense and a respect for the job in hand will help reduce the risk of injury.

Read the instruction manual fully. Observe all safety precautions. Non observance of safety precautions may result in injury or death. Keep this manual safe for future reference.

WARNING: Before using this log stand always check that all nuts and bolts are secure and that the log stand is not damaged or rusting.

Find a suitable location. Use the log stand on firm, level ground only. Do not use on sloping or uneven ground.
After securing a log in the log stand, check the stability and balance before starting to cut. The log stand must not be able to tilt. Always cut in a downward direction. NEVER cut in an upward direction.

Never hold the chain close to the chain tubes or place your fingers in the chain links.

Only cut with the bottom of the chainsaw bar as the log may otherwise shift away from the rotating chain, become unstable and increase the risk of personal injury.

Keep the work area tidy and clean. Clear and stack the sawn logs away from the log stand to keep the work area clear of obstructions and safety hazards.

Keep bystanders away. Children, onlookers and passers by must be restricted from entering the work area for their own protection.

WARNING: Read and observe the operating instructions of the chainsaw you are using and wear all recommended safety gear.

Dress properly. Always wear appropriate PPE (Personal Protective Equipment) as specified by the chainsaw manufacturer and always wear safety shoes or boots in case a log is accidentally dropped on your feet.

6. TECHNICAL DESCRIPTION

6.1 IDENTIFICATION

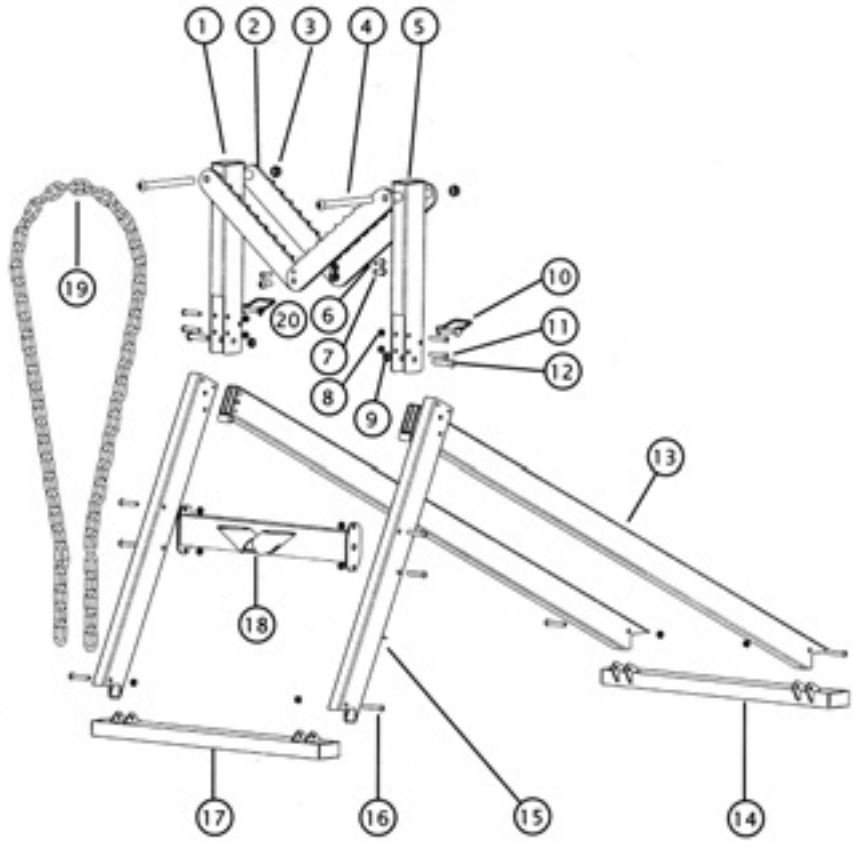

1. Left upright.
2. V-Blade.
3. M12 nyloc nut.
4. M12 x 125mm socket button head bolt.
5. Right upright.
6. M6 x 20mm socket button head bolt.
7. M10 x 20mm socket button head bolt.
8. M6 nyloc bolt.
9. M6 nyloc bolt.
10. Locking pin.
11. M6 x 40mm socket button head bolt.
12. M8 x 40mm socket button head bolt.
13. Back leg.
14. Back foot.
15. Front leg.
16. M6 x 35mm socket button head bolt.
17. Front foot.
18. Brace.
19. Log securing chain.
20. M10 nyloc nut.

7. ASSEMBLY PROCEDURE

Prior to commencing the assembly of this log stand, please check the package contents to ensure that you have all the items as per diagram 6.1 (Page 7).

NOTE: You will require the following tools to complete the assembly; spanners M6, M8, M10 and M12 and Hex. head keys 5, 6, 8 and 10mm these are not supplied.

IMPORTANT: Do not fully tighten nuts and bolts until after the assembly is completed.

7.1 ASSEMBLY INSTRUCTIONS (FIGS 1-3)

Connect the left upright ① and 2 x V-Blades ② using an M12 x 125mm bolt and M12 nyloc nut. Note that if the left upright is laid flat, as shown in Fig.1, then it has a longer ferrule projecting to the left.

FIG. 1

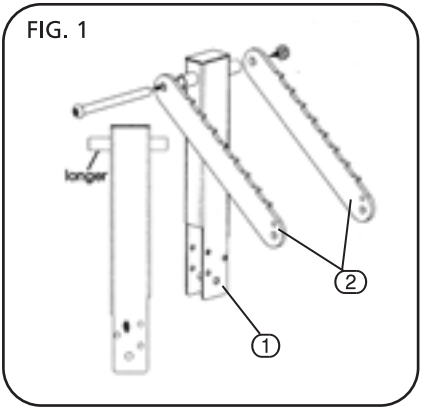

Connect the right upright ⑤ and the remaining 2 x V-Blades ② using the remaining M12 x 125mm bolt and M12 nyloc nut. Note that if laid flat as shown, the right upright has the longer ferrule projecting to the right.

FIG. 2

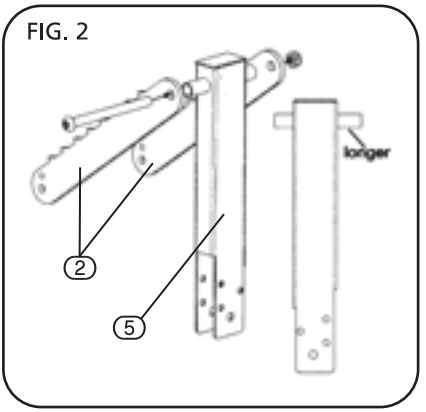

Connect the V-blades of the 2 upright assemblies together using 2 x M10 x 20mm bolts and 2 x M10 nyloc nuts. Ensure that the V-blades of the left and right assemblies overlap as shown.

FIG. 3

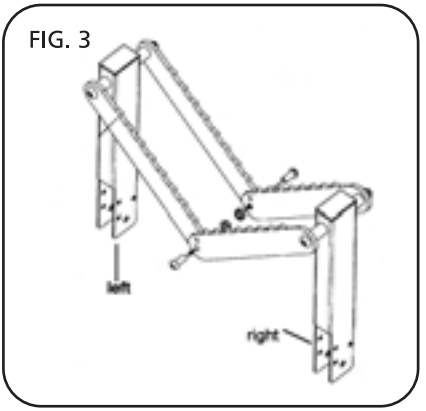

7.1 ASSEMBLY INSTRUCTIONS (cont'd) (FIGS 4-6)

Connect a front leg (15) to each of the uprights using 2 x M6 x 35mm bolts and 2 x M6 nyloc nuts. The legs are inserted in the slot in the bottom of the uprights and the bolts passed through the two vertically aligned holes in each upright and the corresponding holes in the ends of each leg.

FIG. 4

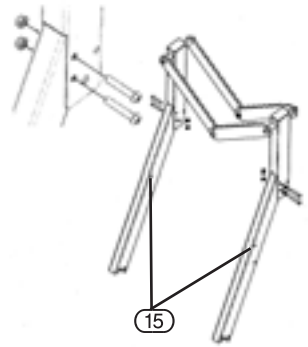

Connect the brace (18) between the front legs using 4 x M6 x 35mm bolts and 4 x M6 nuts. The brace should be orientated so that the two chain tubes face away from the v-blade assembly and the horizontal openings in the tubes face upwards.

FIG. 5

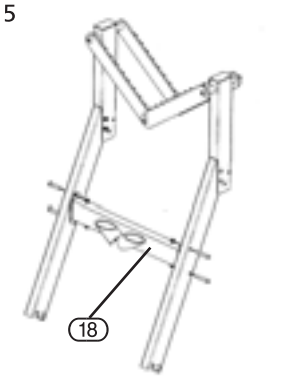

Connect the front foot (17) to the front legs using 2 x M6 x 40mm bols and 2 x M6 nuts. The front foot has the mounting brackets on the top face of the foot.

FIG. 6

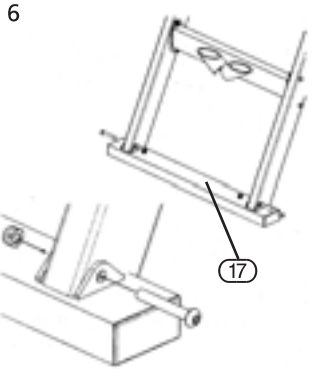

7.1 SETTING THE LOG STAND (cont'd) (FIGS 7-9)

Connect a back leg (13) to each upright using one M8 x 40mm bolt and M8 nut per leg. The bolt should pass through the ferrule mounted at the end of each leg, with the leg oriented so that the ferrule is on the underside.

FIG. 7

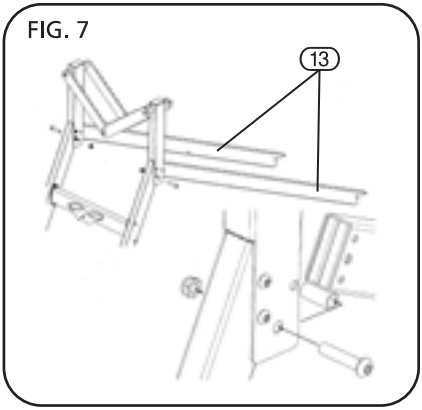

Attach the back foot (14) to the back legs using 2 x M6 x 40mm bolts and 2 x M6 nuts.

FIG. 8

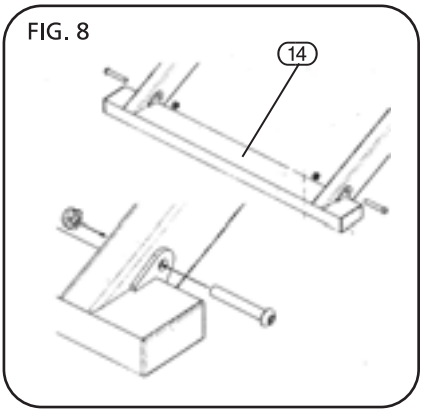

Complete the assembly by fully tightening all nuts and bolts that have been fitted at each step.

NOTE: Do not over tighten the M8 nut and bolt securing each back leg to the uprights otherwise it will not be possible to fold the log stand for storage.

IMPORTANT: Be careful not to lose the 2 x M6 x 20mm bolts and M6 nuts and the two locking pins during assembly, as these will be needed if loading heavy logs (see fig.11).

FIG. 9

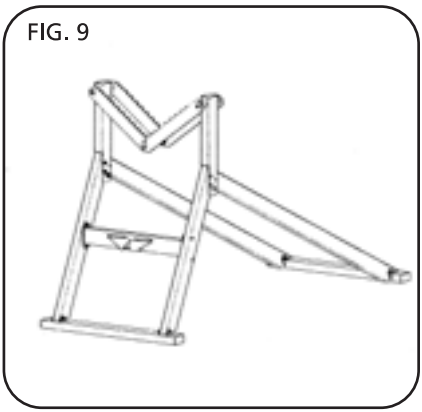

8. OPERATING THE LOG STAND

8.1 OPERATING THE LOG STAND (FIGS 10-12)

Open the legs of the log stand to their maximum extent and place the it on firm level ground so that it is stable.

FIG. 10

When cutting large heavy logs, always insert the 2 locking pins (10) through the uprights and the back legs and add the 2 M6 bolts (6) and nuts to the V-blades.

FIG. 11

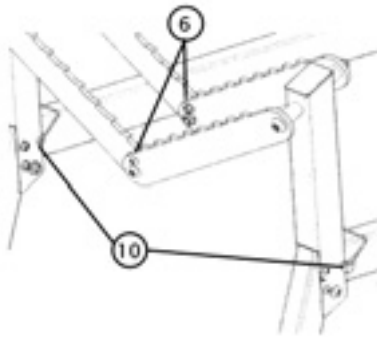

Raise the end of the log and place it in the V-blades so that approximately 1/3 of it's length overhangs the V-blades in the direction of the brace.

FIG. 12

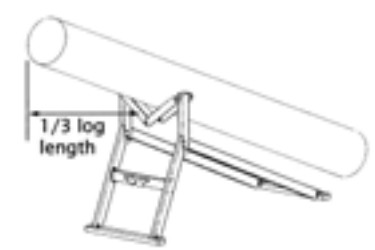

8.2 ATTACHING THE CHAIN (FIG 13)

Place the chain over the log, in line with the chain tubes and pass the ends of the chain through the tubes. Ensure that the ends of the chain are approximately the samne distance from the ground.

FIG. 13

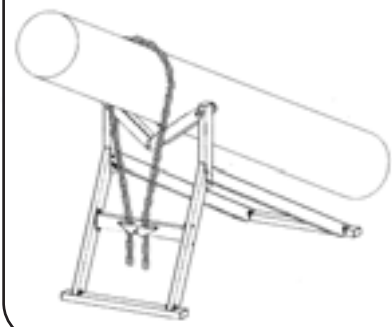

8.3 SETTING THE LOG (FIGS 14-15)

Push down on the raised end of the log until it goes just past the horizontal and check that both ends of the chain slide through the chain tubes.

FIG. 14

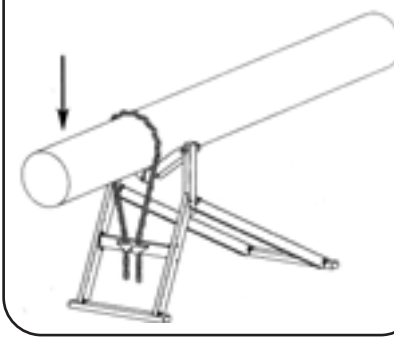

Remove the downward pressure so that the long end moves dowards causing the chain to lock in both chain tubes. The log should be approximately level. The angle of the log can be adjusted by re-applying dowanward pressure on the log and pulling or pushing on the ends of the chain.

FIG. 15

8.4 CUTTING THE LOG (FIG 16)

Always begin by cutting the initial few logs from the long overhanging end, then cut successive logs in a sequence that maintains approximately 1/3 of the remaining log length in the direction of the chain and 2/3 in the direction of the back legs.

WARNING: If it is necessary to adjust the chain to change the angle of the log, always hold the chain by the ends, never close to the chain tubes.

IMPORTANT: The weight of the log is sufficient to securely locate it in the V-blades, do not apply downward pressure to the long overhanging end of the log as this may result in damage.

IMPORTANT: Check that the log is secure and the log stand is stable before beginning to cut.

Note that when working with a very heavy or long log, the weight of the log is sufficient to securely locate it in the V-blades after the log has been secured with the chain.

DO NOT apply downward pressure to the longer overhanging end of the log as this may result in damage to the log holder.

When cutting large heavy logs, always add the 2 x M6 x 20mm locking bolts and nuts (Fig.17) to the V-blade pairs and insert the two spring locking pins though the uprights and the long legs.

FIG. 16

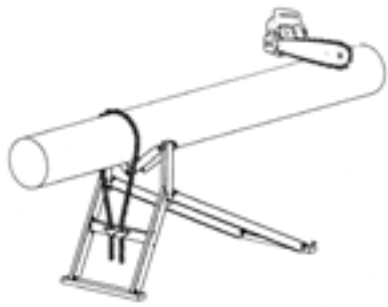

FIG. 17

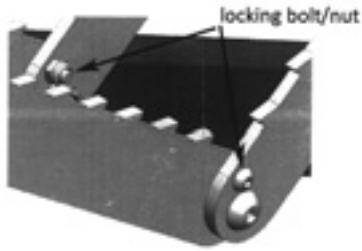

9. MAINTENANCE

9.1 MAINTENANCE

This log stand is load bearing, therefore it is essential to routinely check the fixings and overall condition of the steel work. Do not use the log stand if it exhibits any signs of fatigue or wear. Apply common sense and if in doubt, do not use it. Contact Draper Tools for further advice.

10. DISPOSAL

10.1 DISPOSAL

- At the end of the log stand's working life, or when it can no longer be repaired, ensure that it is disposed of according to national regulations.
- Contact your local authority for details of collection schemes in your area.

  In all circumstances:
  - Do not dispose of in domestic waste.
  - Do not incinerate.
  - Do not abandon in the environment.

CONTACTS

- **DRAPER TOOLS LIMITED,**
  Hursley Road, Chandler's Ford,
  Eastleigh, Hampshire. SO53 1YF. U.K.

- **Helpline:** (023) 8049 4344
- **Sales Desk:** (023) 8049 4333
- **Website:** www.drapertools.com
- **E-mail:** sales@drapertools.com
- **Sales Fax:** (023) 8049 4209
- **General Enquiries:** (023) 8026 6355

- **Service/Warranty Repair Agent**
  For aftersales servicing or warranty repairs, please contact the Draper Tools Helpline for details of an agent in your local area.

YOUR DRAPER STOCKIST

RDDH220513